Course: Electronic Circuits 609

Course Instructor: Assoc.Prof. Dr. Eman Azab

Department of Electrical Engineering, IET

Solar Battery Charger Circuit

Group Members:

Marwan Elsayed Ali	**58- 20308**	**T-34**
Ali Emad	**58- 13981**	**T-34**
Ahmed Reda	**58 -23988**	**T-34**

Date of Submission: April 26th, 2025

1. Introduction

This project designs a regulated solar battery charger for a **6V/4.5Ah rechargeable battery** using a **12V solar panel** and an **LM317 voltage regulator**. The circuit incorporates **over-voltage protection** and **reverse current protection** to ensure safe and efficient charging. Simulations and hardware implementation validate the design under varying environmental conditions.

2. Objectives Of the Project

- Design a solar charger with regulated output voltage.
- Integrate over-voltage and reverse current protection.
- Simulate and test the circuit under different solar radiation and temperature conditions.

3. Working Principle for Circuit Components

I) Solar panels (photovoltaic cells) operate based on the **photovoltaic effect**, converting light energy into electrical energy. When sunlight strikes the semiconductor material (typically silicon), photons excite electrons, creating electron-hole pairs. The p-n junction's electric field separates these charges, generating a direct current (DC). The performance of solar panels is influenced by **solar radiation (irradiance)** and **temperature**. Higher irradiance increases the short-circuit current (Isc), as seen in the simulation. Conversely, higher temperatures reduce the open-circuit voltage (Voc) due to increased electron-hole recombination.

Solar Cell Operation

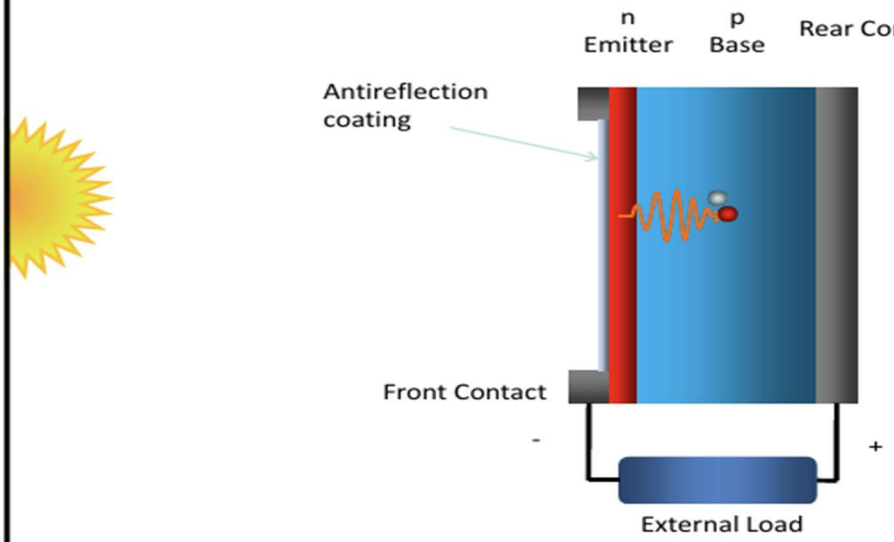

Absorption of photon creates an electron hole pair. If they are within a diffusion length of the depletion region the electric field separates them.

The electron after passing through the load recombines with the hole completing the circuit

Circuit Diagram

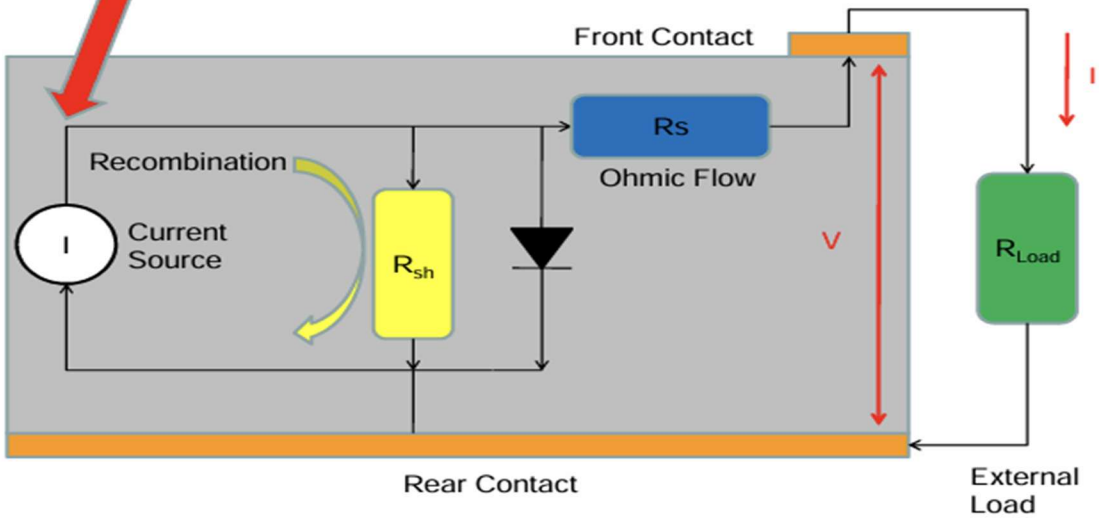

II)The LM317 is an adjustable voltage regulator that maintains a stable 6V output for battery charging. Using resistors R1 (180Ω) and VR (1kΩ pot), it follows

$$Vout = 1.25 \times (1 + \frac{VR}{R1}) + I_{adj} \times VR$$

to compensate for solar panel fluctuations .It provides built-in current limiting, thermal protection (shuts down at ~125°C), and ripple rejection for reliable operation. The potentiometer allows fine adjustment from 5-7V to optimize charging.

III) The 6.8V/1W Zener diode provides overvoltage protection by conducting excess current when battery voltage exceeds 6.8V. It works with transistor T1 (BC548) to create a cutoff mechanism, preventing battery damage from overcharging. The Zener maintains reverse breakdown at its rated voltage, ensuring safe charging while allowing normal operation below threshold.

IV) The 1N4007 diodes serve critical protection roles: D1 prevents reverse current flow from battery to solar panel during low-light conditions, while D2 provides additional current limiting and isolation. Their 0.7V forward voltage drop and 1A current rating make them ideal for this low-power charging circuit.

V) The BC548 NPN transistor acts as a voltage-controlled switch in the protection circuit. When Zener diode conducts (at >6.8V), it activates the transistor to shunt excess current away from the battery, implementing the overcharge cutoff function.

VI) The resistor network (180Ω, 1kΩ, 10Ω) performs multiple functions: sets regulator output voltage, limits base current to the transistor, and provides charging current measurement. The 1kΩ potentiometer enables precise voltage adjustment for optimal charging.

VII) The 6V/4.5Ah rechargeable battery stores converted solar energy. The circuit maintains proper charging voltage while protection components prevent overvoltage (>6.8V) and reverse current flow that could damage the battery.

4. Component Descriptions

Component	Value/Part No.	Purpose
Solar Panel	12V	DC power source. Output varies with solar radiation and temperature.
LM317 Regulator	LM317	Adjusts output voltage to 6V using R1 and VR.
Diode D1, D2	1N4007	Prevents reverse current flow (D1) and limits current (D2).
Zener Diode	6.8V/1.3W	Triggers over-voltage cut-off at 6.8V.
Resistors	180Ω, 1kΩ, 10Ω	R1 sets LM317 output; R3 limits current; VR fine-tunes voltage.
Transistor (Q1)	MJE13007-2	Acts as a switch to disconnect the battery during over-voltage conditions.
Battery	150Ω/3W	A power resistor simulating a battery/load

5. Simulation Results Over Large Range

5.1 Short-Circuit Current (Isc) vs. Solar Radiation

Temp.	200 W/m²	400 W/m²	600 W/m²	800 W/m²	1000 W/m²
0°C	1.23 A	2.46 A	3.69 A	4.92 A	6.15 A
25°C	1.25 A	2.5 A	3.75 A	5.0 A	6.25 A
50°C	1.27 A	2.54 A	3.81 A	5.08 A	6.35 A

- **Here is a part of Large Range simulation on MATLAB at T=25 Degree Celsius**:

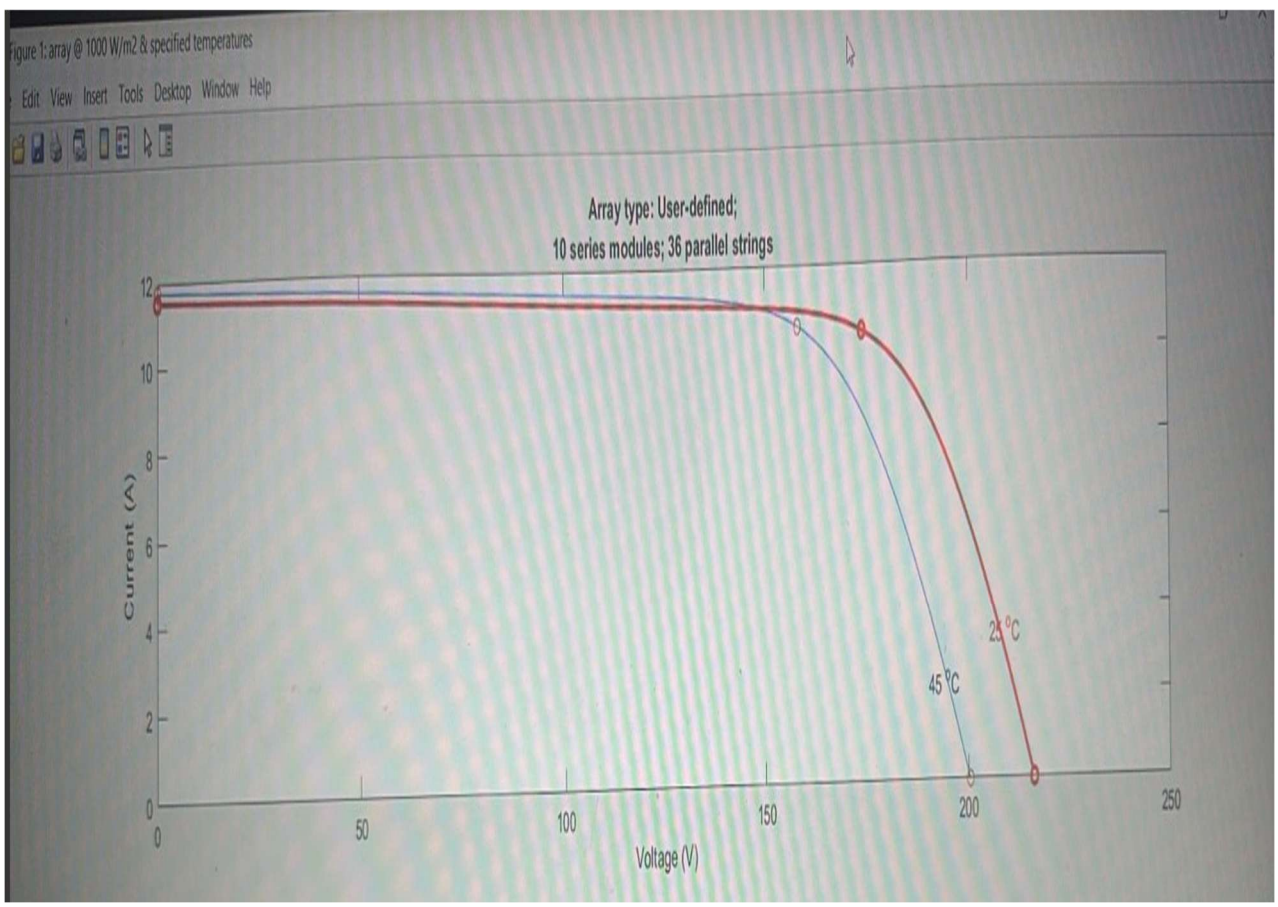

5.2 Open-Circuit Voltage (Voc) vs. Solar Radiation

Temp.	200 W/m²	400 W/m²	600 W/m²	800 W/m²	1000 W/m²
0°C	20.54 V	21.24 V	21.66 V	22.03 V	22.18 V
25°C	18.56 V	19.26 V	19.71 V	20.07 V	20.25 V
50°C	16.4 V	17.18 V	17.68 V	18.07 V	18.28 V

6-Simulated Circuit on Proteus:

I) Using Solar Panel as a Component from the library to provide 12V to charge 6 V battery:

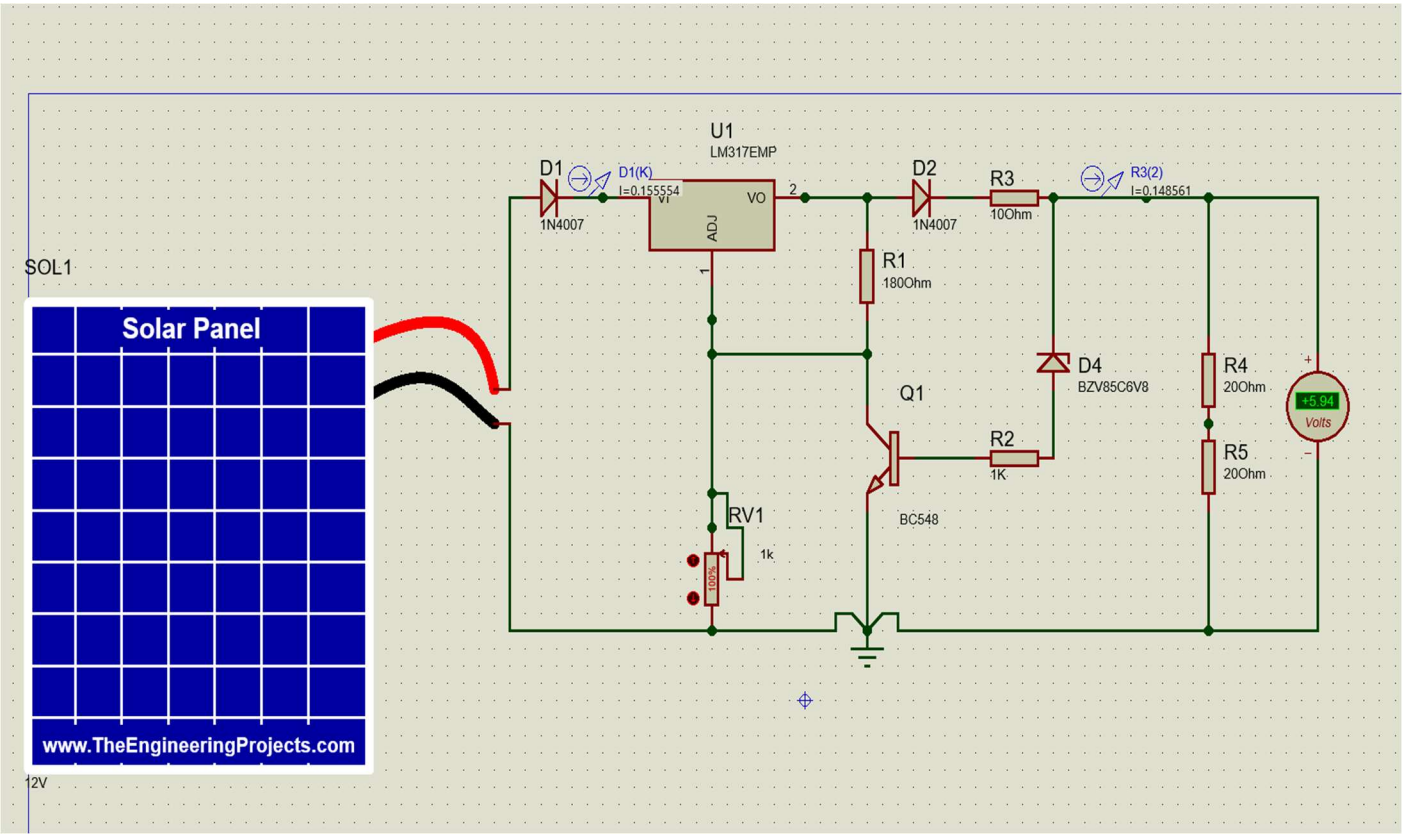

II) Using Equivalent model simulation, the effect of Solar Panel using Current source that shows the IV characteristics of the PV over a small range:

1) At T=0 Degree Celsius:

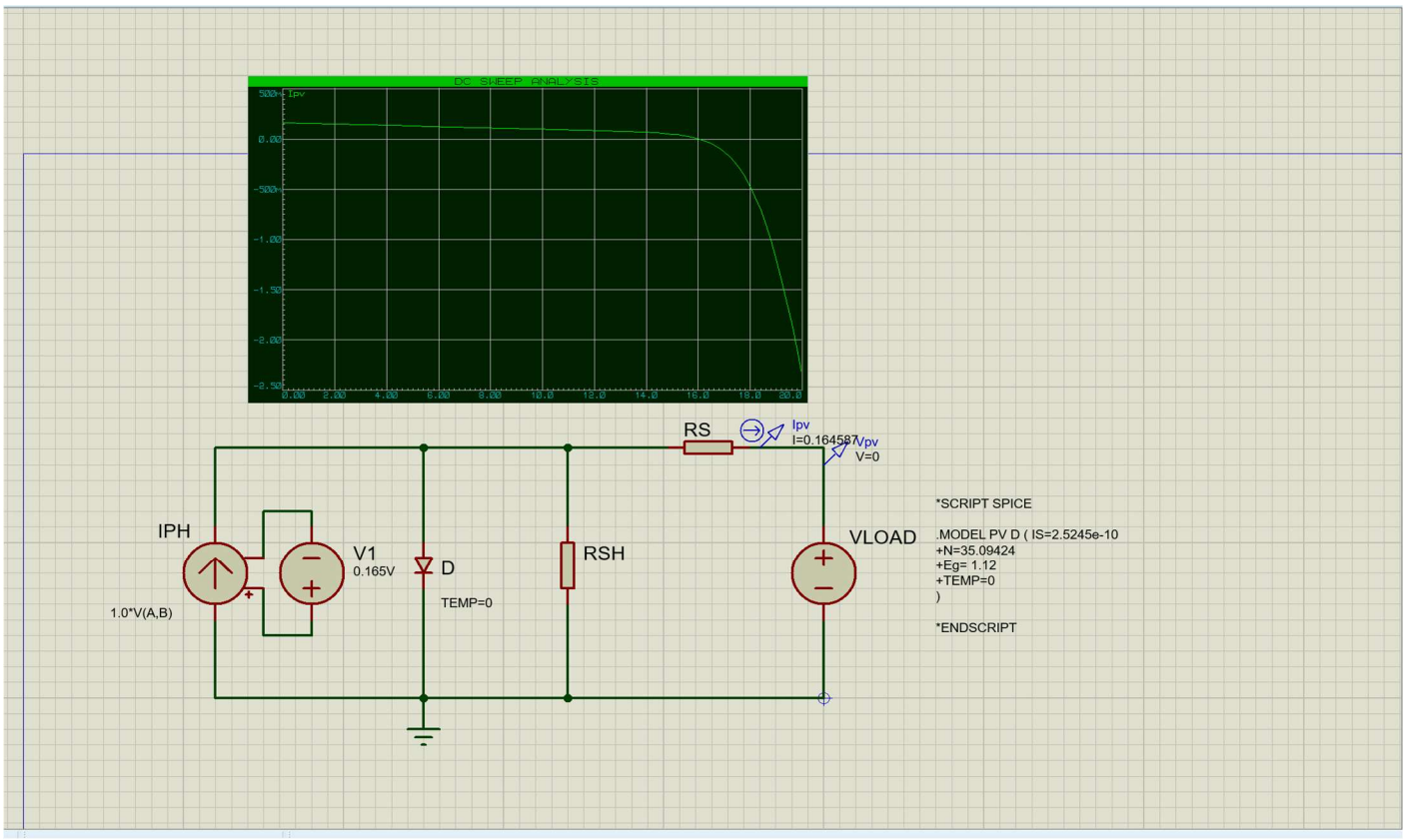

2) At T=25 Degree Celsius:

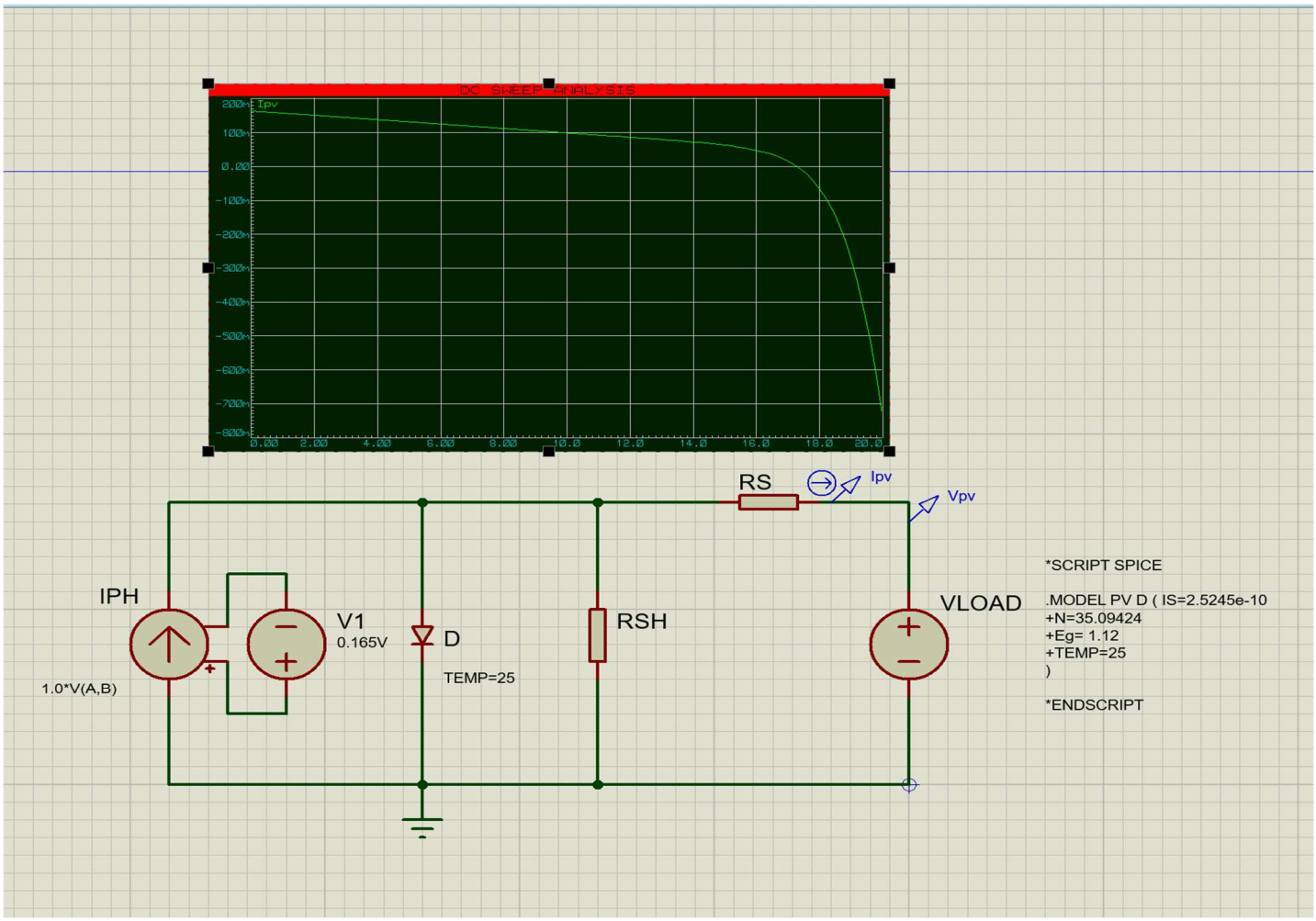

3) At T=50 Degree Celsius:

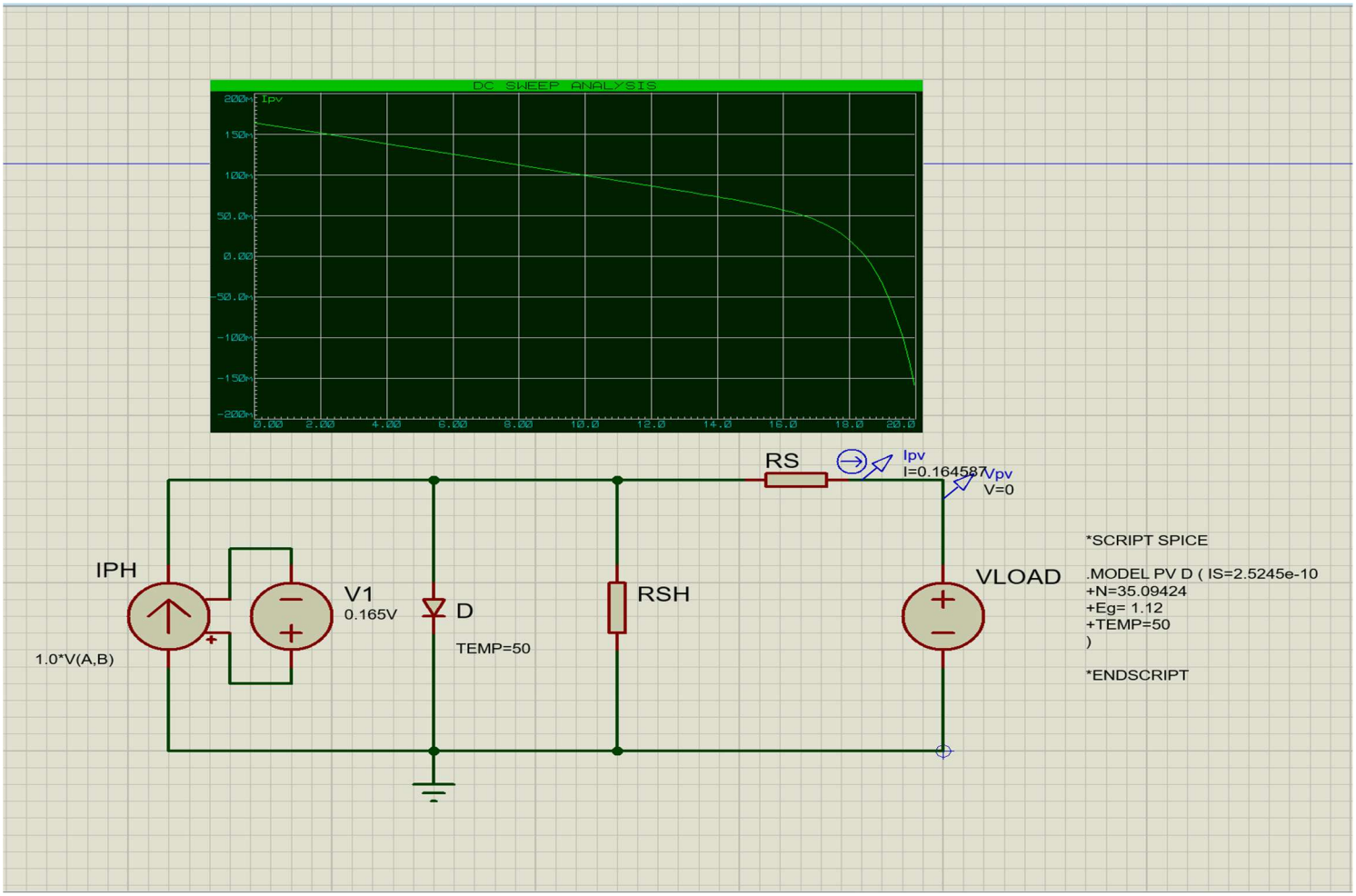

III) The Plot shows the regulated voltage across the battery vs the varying input voltage (Vout vsVin) :

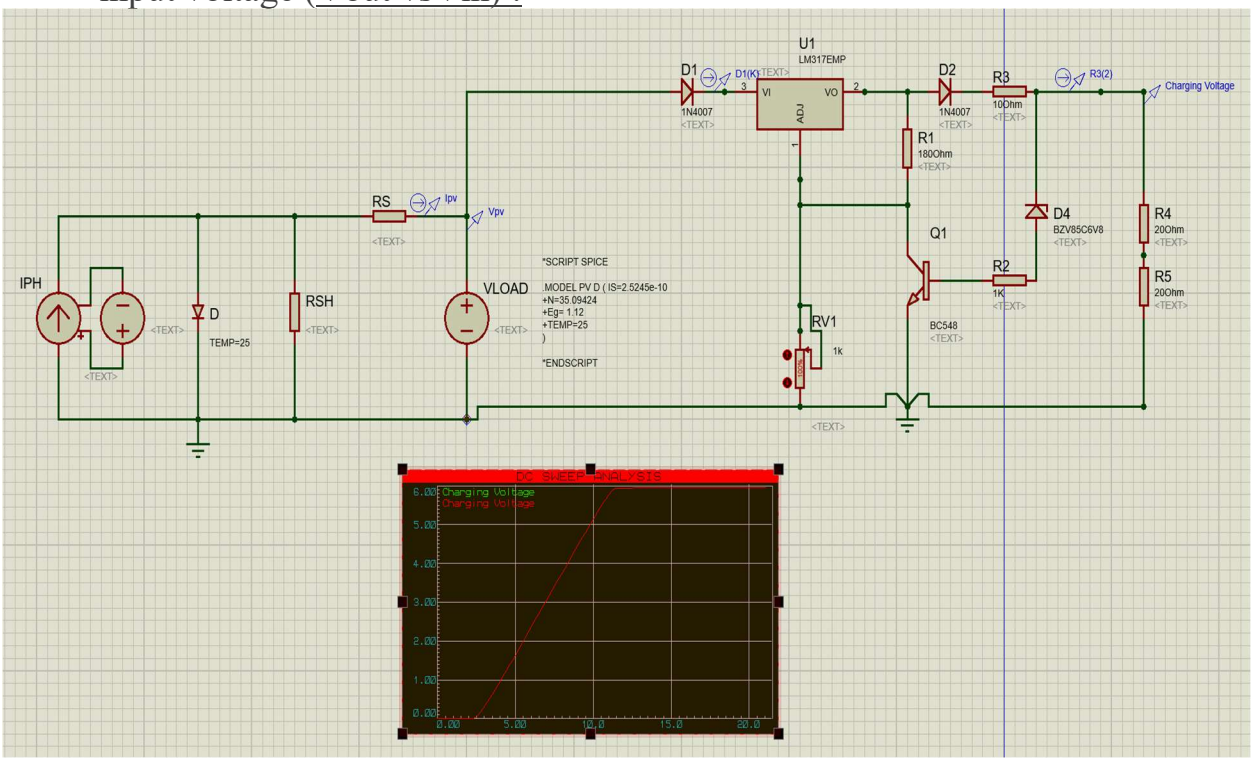

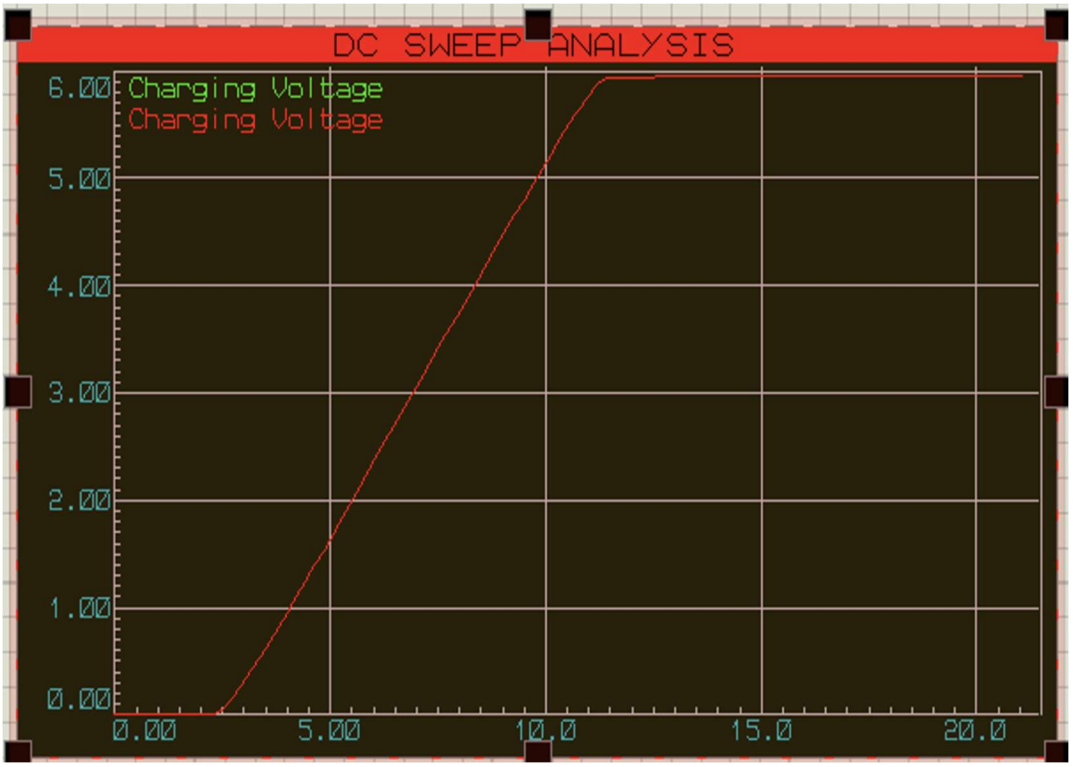

IV) The Plot shows the charging current through the battery vs the varying input current. (**I_out vs I_in) :**

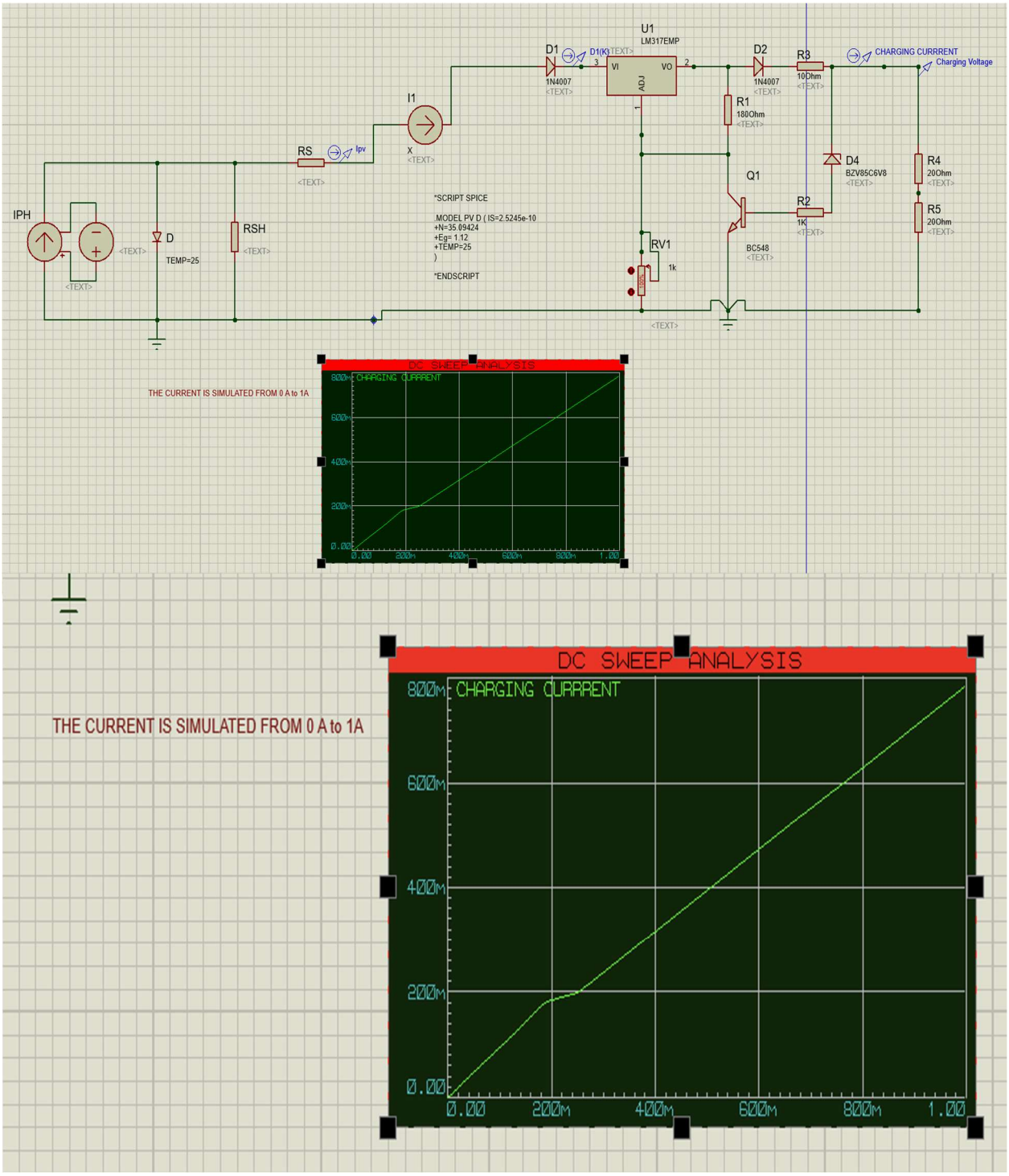

7-Conclusion

Through this project, we successfully designed and tested a solar-powered battery charger circuit capable of safely charging a 6V/4.5Ah battery. Our design utilized a 12V solar panel along with an LM317 voltage regulator to maintain stable charging voltage, while incorporating protection features like over-voltage cutoff and reverse current prevention.

The simulation results demonstrated how environmental factors affect performance - we observed that higher temperatures decreased the open-circuit voltage while increased solar irradiance boosted the short-circuit current. Our Proteus simulations validated the circuit's operation under various conditions, showing proper voltage regulation and protection triggering at the designed 6.8V threshold.

While working on this project, we gained valuable hands-on experience in circuit design, component selection, and simulation techniques. The practical implementation helped us understand real-world challenges in solar energy systems, particularly regarding voltage regulation and battery protection.

This project successfully met all its objectives, providing us with important insights into renewable energy systems and power electronics.